THE AMERICAN UNIVERSITY IN CAIRO

الجامعة الأمريكية بالقاهرة

Low Power VLSI PROJECT

Dr. Mohab Anis

Spring 2025

Armia Samir 900211485

Farah Wahib 900212452

Paula Wahba 900214377

Mariam Mikhael 900213172

1. Introduction

In this project, our team aimed to design and implement a low-power VLSI architecture for an IoT-enabled bike device. With the rising popularity of smart and connected vehicles, low power consumption has become a key priority, particularly for battery-operated devices such as IoT-integrated bicycles. These devices offer advanced features such as GPS tracking, theft prevention, and performance monitoring, all of which require efficient digital logic and minimal power usage.

---

2. Project Scope and Objectives

The main objective of the project was to create a functional and energy-efficient design that would support the needs of an IoT bicycle system. Our specific focus was on minimizing power consumption through careful logic design, proper transistor sizing, and selection of the most suitable logic families. This required not only technical proficiency with tools like Cadence Virtuoso, but also a deep understanding of the trade-offs involved in low-power design.Our supply voltage was 1 V ,and our operating frequency was 100M Hz.

---

3. Design Overview

3.1 OP Code

0000	Logical shift right	1000	Comparator
0001	Arithmetic shift left	1001	2's complement
0010	Rotate right	1010	Arithmetic shift right
0011	Rotate left	1011	incrementer
0100	Add/Sub	1100	AND
0101	Decrementer	1101	OR
0110	—--------	1110	XOR
0111	—--------	1111	1's complement

3.2 ALU Schematic

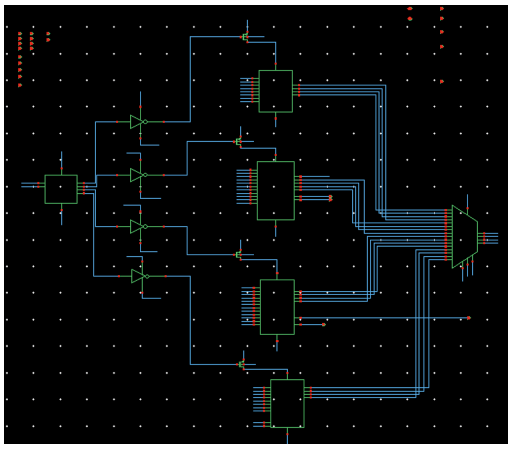

3.3 ALU Power and Delay

Characteristic	Value
Power Consumption	3.306u
Delay	tp=2.77n

Made with Napkin

---

4. Subcomponent Design Details

4.1 Shifter Block

We implemented a shifter block to handle bit-wise shift operations required for performance tracking and data encoding. The shifter we used was the barrel shifter, which is four parallel 4-1 multiplexers.

The four operations in this block are: Arithmetic shift left, logical shift right, Rotate right, and Rotate left.

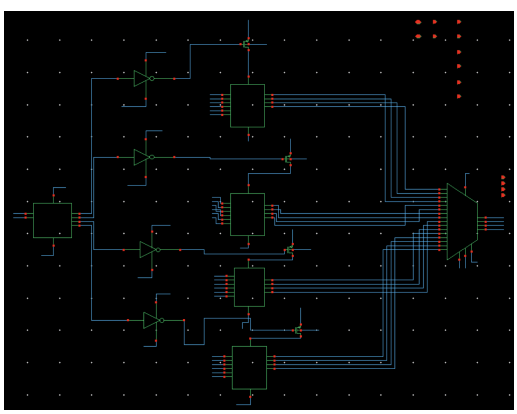

Characteristic	Value
Power Consumption	182n
Delay	tp=1.87n

Made with Napkin

Arithmetic Shift Right schematic

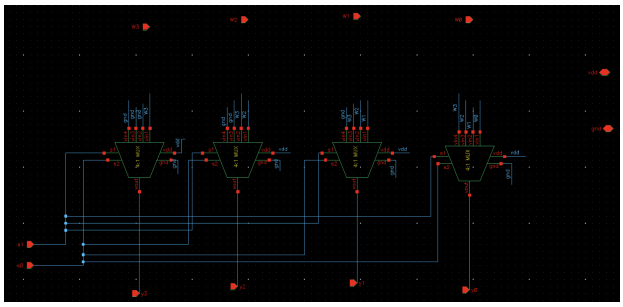

4.2 Add/Subtract Block

Addition and subtraction are vital for GPS coordinate updates and performance metrics. We implemented the adder/subtractor in the same schematic using XORs and a ripple carry adder, and added a control input to select the type of operation.

The two operations in this block are: Adder/Subtractor, Decrementer

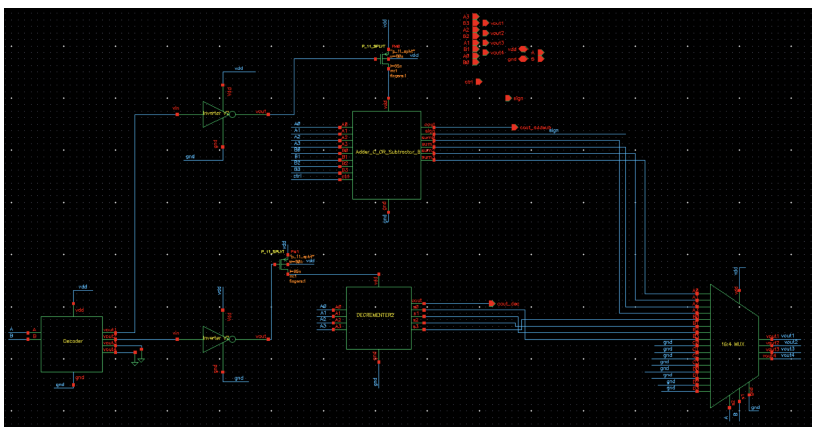

Characteristic	Value
Power Consumption	7.055u
Delay	tp=2.06n

Made with Napkin

Ripple Carry Full Adder schematic

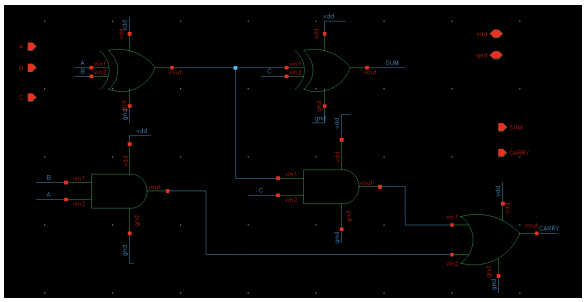

4.3 Comparator Block

This block helps in threshold comparisons—e.g., speed limits or position monitoring.

The four operations in this block are: Comparator, Arithmetic shift right, 2's complement, and incrementer.

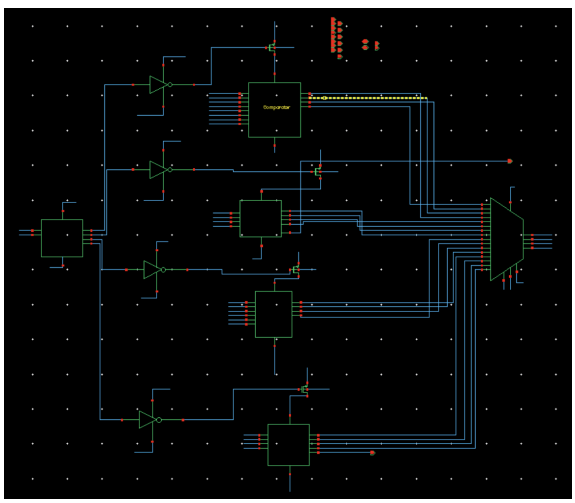

Characteristic	Value
Power Consumption	3.27u
Delay	tp=2.77n

Made with Napkin

Magnitude Comparator schematic

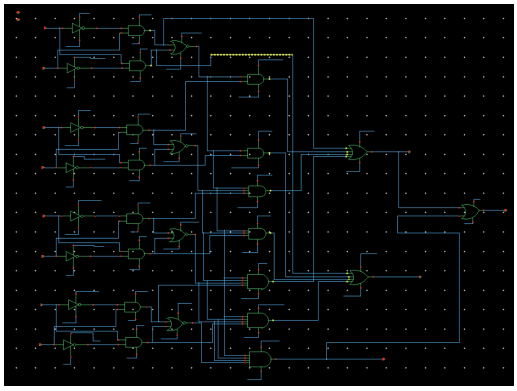

4.4 Logic Unit

The logic unit implements various bitwise operations useful for device control and configuration.

The four operations in this block are: AND, OR, XOR, and 1's complement

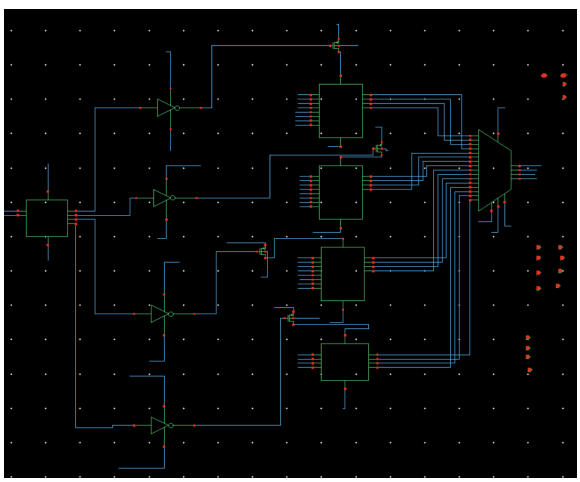

Characteristic	Value
Power Consumption	2.717u
Delay	tp=1.59n

Made with Napkin

---

5. Design Challenges

The most significant challenge our team faced was reducing power consumption while maintaining functional integrity. This involved several iterations of transistor sizing, particularly in 2-input logic gates. In early implementations, mapping 2-input gates directly to inverters led to higher power consumption than desired. As a result, we focused on manual sizing and experimented with logic styles such as CMOS and pass-transistor logic (PTL) to find the best trade-offs.

---

6. Lessons Learned

This project helped us gain a deeper understanding of:

- **The role of transistor sizing in optimizing power and delay.**
- **The impact of using different logic families (CMOS vs. PTL).**
- **Real-world constraints in VLSI design, particularly in IoT contexts.**
- **Collaborative team design using Cadence Virtuoso, which allowed detailed schematic design, layout, and simulation under realistic parameters.**

---

7. Future Improvements

If given more time or resources, we would have further refined our gate-level implementations. Specifically, we would rework all 2-input gates to use individually sized transistors instead of simplified inverter mappings. This would likely lead to additional power savings and improved area efficiency.

---

8. Conclusion

Through this project, we successfully designed and evaluated a low-power VLSI architecture for an IoT bike device. The process involved extensive testing, simulation, and iteration. Our team learned how to approach low-power design methodically and effectively, a skill that will prove invaluable in future digital design endeavors. We are proud of what we accomplished and excited to apply this experience in more advanced and complex system designs.

---

8. References

Kumar, Satyam, and Rahul Ranjan. "Low Power ALU Design Using Reversible Logic Gate." *International Journal for Research Trends and Innovation (IJRTI)*, vol. 8, no. 6, June 2023, https://ijrti.org/papers/IJRTI2306112.pdf.

Abdelhadi, Asim. "Low Power Design Techniques in VLSI Systems." *COEN 6511 Final Project Report*, Concordia University, https://users.encs.concordia.ca/~asim/COEN_6511/Projects/final6511report.pdf.

Abdelhadi, Asim. "Ripple Carry Adder." *Lecture Notes for COEN 312*, Concordia University, https://users.encs.concordia.ca/~asim/coen312/Lectures/RCA.pdf.

GeeksforGeeks. "4 Bit Binary Incrementer." *GeeksforGeeks*, 21 Jan. 2023, https://www.geeksforgeeks.org/4-bit-binary-incrementer/.

GeeksforGeeks. "4 Bit Binary Decrementer." *GeeksforGeeks*, 21 Jan. 2023, https://www.geeksforgeeks.org/4-bit-binary-decrementer/.

Sharma, Anuj, and Sumit Yadav. "Design and Implementation of Low Power 4-Bit ALU Using VHDL." *International Journal of Engineering Development and Research (IJEDR)*, vol. 7, no. 1, 2019, https://rjwave.org/ijedr/papers/IJEDR1901044.pdf.

Wheeler, John Mark. "A VLSI Design for a Low-Power Digital Filter." *LSU Master's Theses*, Louisiana State University, 1990, https://repository.lsu.edu/cgi/viewcontent.cgi?article=3890&context=gradschool_theses.